FK30WCC-LS2

30", WINE CELLAR, 0FW Model

BUILT-IN

CLASSIC® SERIES

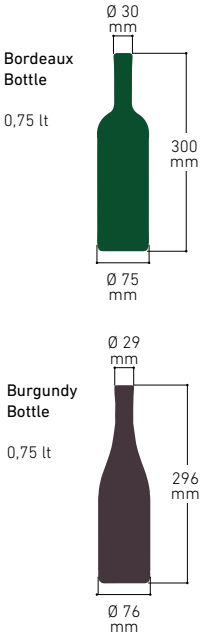

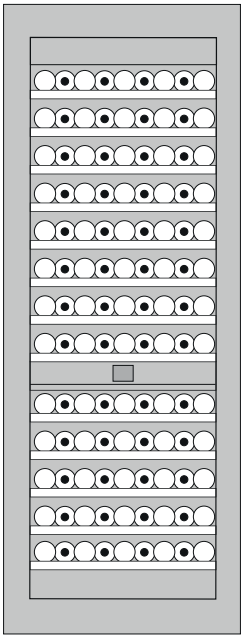

FEATURES

- Made in Italy
- OptiView™: OptiView LED lights
- ProVent™: Uniform air circulation maintains consistent temperatures throughout the appliance resulting in better food preservation
- Humidity Control: Choose between high, medium and low humidity – particularly important for wine storage
- Total No Frost: Temperature control helping mitigate cooling loss when opening the refrigerator door. No more frost build-up that requires defrosting
- EquiLance™: Achieve a seamless built-in look with Fhiaba's innovative door hinge

GENERAL PROPERTIES

Equilance Hinge	YES
Soft-Closing Glides	NO
Low Vibration	YES
OptieView (Led Light Spots)	YES
Shelves	13
Type Of Shelves	WOOD
Door Bins	N/A
Fridge Interior Drawers	N/A
Freezer Drawers	N/A
Evenlift Shelves	NO
Full Extension Shelves 90° Door Opening	YES
Full Extension Drawers 90° Door Opening	NO
Defrost Process	AUTOMATIC
Ice Maker With Water Filter	NO
Door Open Alarms	YES
Shopping Fridge	NO
Shopping Freezer	NO
Power Failure Alert	YES
Water Dispenser With Water Filter	NO

Product sheet - All specifications are subject to change without notice

FK30WCC-LS2

30", WINE CELLAR, 0FW Model

BUILT-IN

CLASSIC® SERIES

PRODUCT DETAIL

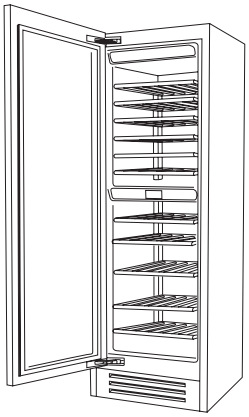

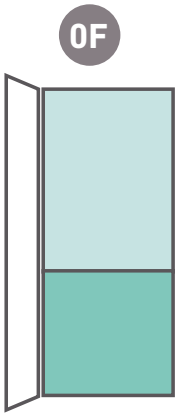

1D | 2M

wine cellar

D = door

M = separate microclimates

CAPACITY	
Net Capacity	16.8 cuft (477 l)
Upper Compartment Wine Cellar Capacity (Bottles)	72
Lower Compartment Wine Cellar Capacity (Bottles)	45

TECHNICAL DETAILS	
Total Absorbed Current (A)	2.5
Voltage (V)	115
Frequency (Hz)	60
Power Cord Length	78 3/4" (2 m)
Plug Type	3-prong (15 Amp)
Climate Class	SN/T
Refrigerant (Gas)	R600a
Water Connection / Female Attachment	N/A

EFFICIENCY	
Estimated Yearly Electricity Use	232 kwh

DIMENSIONS & WEIGHT	
Height Of The Product (Minimum)	83 1/2" (2120 mm)
Adjustable Feet Height	up to 1" (25 mm)
Width Of The Product	29 7/8" (760 mm)
Depth Of Product Without Handle	24 3/8" (620 mm)
Cut-out Height	84" (2134 mm)
Cut-out Width	30" (762 mm)
Cut-out Depth	min 24 3/4" (630 mm)
Net Weight	337 lbs (153 kg)
Gross Weight	384 lbs (174 kg)

TEMPERATURE RANGES	
Climate Zones	2
Compartment 1 / Upper Temperature	from 39°F (4°C) to 64°F (18°C)
Compartment 2 / Middle Temperature	N/A
Compartment 3 / Low Temperature	from 39°F (4°C) to 64°F (18°C)

FK30WCC-LS2

30", WINE CELLAR, 0FW Model

BUILT-IN

CLASSIC® SERIES

PRODUCT SPECIFICATIONS AND DIMENSIONS

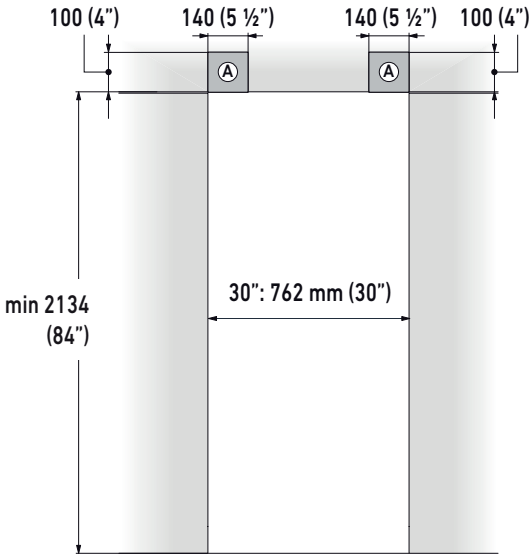

A

Area to be left clear for the anti-tipping brackets

FRONT VIEW

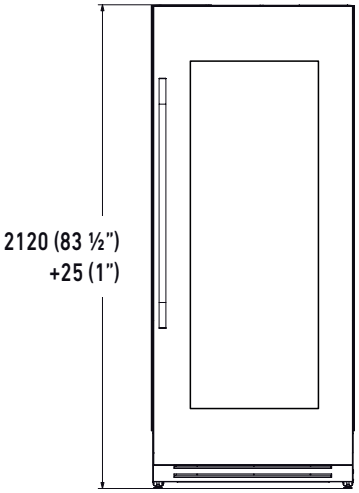

SIDE VIEW

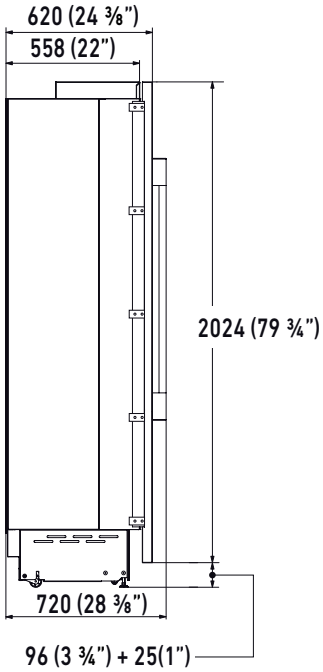

PLINTH SIZE

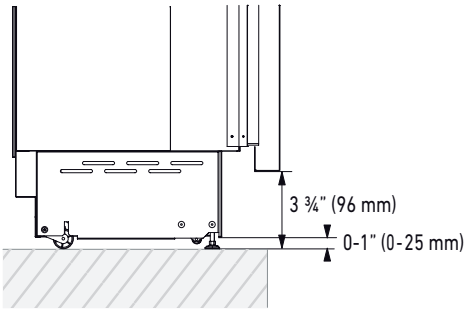

FK30WCC-LS2

30", WINE CELLAR, 0FW Model

BUILT-IN

CLASSIC® SERIES

PRODUCT SPECIFICATIONS AND DIMENSIONS

TOP VIEWS

Door swing clearance

30" model: 1336 mm (52 ⅝")

Minimum distance from the wall (hinge side)

30" model: 103 mm (4 ⅛")

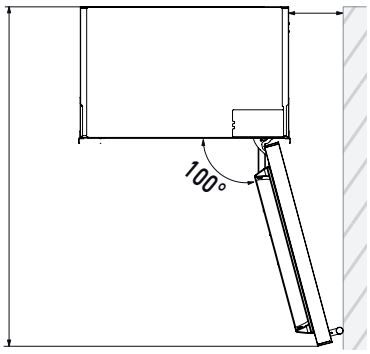

30" model: 735 mm (28 ⅞")

Width of the body of the appliance

620 (24 ⅜")

558 (22")

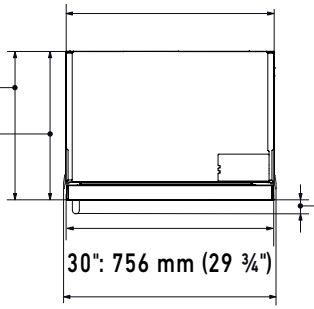

68 (2 ¾")

30": 756 mm (29 ¾")

Width of cladded door

30" model: 760 mm (29 ⅞")

Width of appliance with mounting brackets installed (effective width)

Electrical Connection

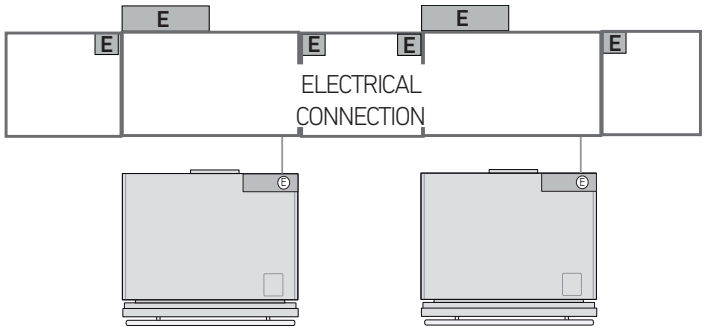

Electrical and water connections (if applicable) should be reachable without having to uninstall the appliance. If the connections must be made directly behind the appliance then it is recommended to recess those connections.
IMPORTANT: do not put the water shut-off valve behind the appliance where it will be inaccessible.