XS5990TGT6

60 cm, FRIDGE AND FREEZER, 0T Model BUILT-IN

X-PRO® SERIE

FEATURES

- Made in Italy.
- Aisi 304 stainless steel body.
- Stainless steel interior finish
- Antibacterial stainless steel interior.
- Evenlift: shelves can slide up and down to be adjusted to any height in the fridge compartment.
- Provent ventilation system encourages uniform distribution of cold air in all fridge compartments by laterally circulation air.
- Equilance: dual - movemenet patented hinge with self - balancing movement ensures stability and resistance.
- Optiview: multi - LED light array (top and side interior) provides brilliant illumination to the entire interior.
- Soft close door and drawers in all compartments
- Smart touch TFT display
- Acoustic and visual signals
- Total no frost 100% automatic system
- Variable speed compressors mainteins precision temperature control with low vibration.
- Sabbath mode
- Front and rear adjustable feet up to 25 mm.
- Two indipendent climatic zone.
- Tempered glass shelves with aluminium profiles.
- Crisper drawers for multi - use preservazion solution. Antibacterial stainless steel interior & rounded courners promoting hygiene and easy cleaning.
- Deep capacity within a standard depth is achieved by a side - mounted evaporators, wich leaves grater interior space.
- Full range of models and configurations (45, 60, 75 and 90 cm). Can easily be combined and configured with other Fhiaba fridge, freezer, wine cellar models to fit your kitchen needs.

GENERAL PROPERTIES

Reversible door	NO
Equilance	YES
SoftClosing Runner	YES
Low vibration	YES
Optieview (LED light spots)	YES
Shelves	3
Slide-out shelves	NO
Type of shelves	GLASS
Door Bins	3
Fridge drawers type	LOW TEMP
Fresco/LowTemp Drawers	2
Bottom drawers	1
Full Extension shelves 90° door opening	
Full Extension drawers 90° door opening	YES
Defrost Process	AUTOMATIC
Ice maker with water filter	NO
Door Open Alarms	YES
Humidity control	NO
Active carbon filter	NO
Air filter control	NO
Shopping Fridge	YES
Shopping Freezer	YES
Power Failure Function	YES

XS5990TGT6

60 cm, FRIDGE AND FREEZER, 0T Model

BUILT-IN

X-PRO® SERIE

PRODUCT DETAIL

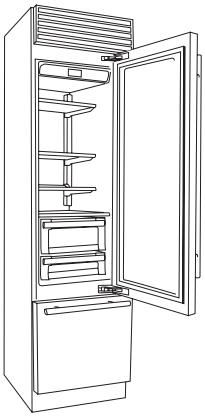

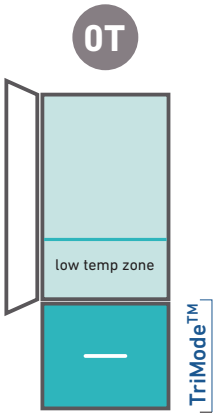

1D | 1BD | 2M

D = door
BD = drawer
M = separate microclimates

CAPACITY	
Volume Compartment 1 (L)	251
Volume Compartment 2 (L)	
Volume Compartment 3 (L)	77
Total Net Volume (L)	328
Total Gross Volume (L)	348
Compartment 1 / Upper wine cellar capacity (bottles)	
Compartment 2 / Lower wine cellar capacity (bottles)	
Compartment 3 / Bottom wine cellar capacity (bottles)	

TECHNICAL DETAILS	
Absorbed power (W)	
Total absorbed current (A)	1.8
Voltage (V)	220-240V
Frequency (Hz)	50-60 Hz
Power Cord Length (mm)	2
Plug Type	Schuko 16A
Climatic class	SN/T
Noise level (dB)	41
Refrigerant (gas)	R600a
Water connection / female attachment	

EFFICIENCY	
New Energy Label class	F
Energy consumption (kWh/year)	288

DIMENSIONS & WEIGHT	
Height of the product (closed weels) (mm)	2120
Adjustable feet height (mm)	25
Width of the product (mm)	599
Depth of Product without handle (mm)	635
Wall cavity height (mm)	2134
Wall cavity width (mm)	600
Wall cavity depth (mm)	650
Net Weight (kg)	170
Gross Weight (kg)	190

TEMPERATURE RANGES	
Climatic compartments	2
Compartment 1 / Upper temperature (°C)	from 2 to 8
Compartment 2 / Middle temperature (°C)	
Low temp zone	YES
Compartment 3 / Low temperature (°C)	from -15 to -22
Dual zone	YES

XS5990TGT6

60 cm, FRIDGE AND FREEZER, 0T Model

BUILT-IN

X-PRO® SERIE

PRODUCT SPECIFICATIONS AND DIMENSIONS

FRONT VIEW

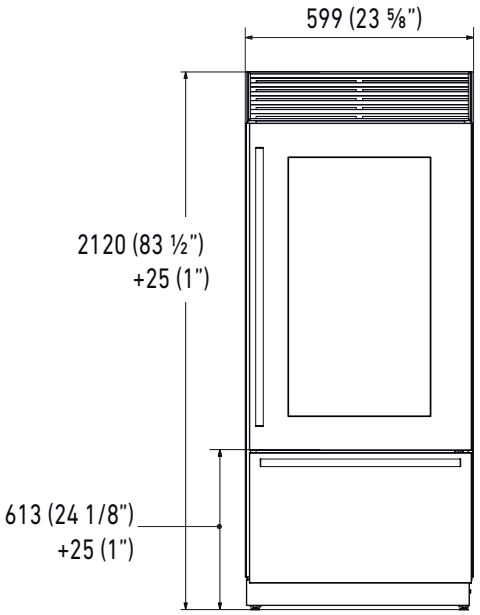

SIDE VIEW

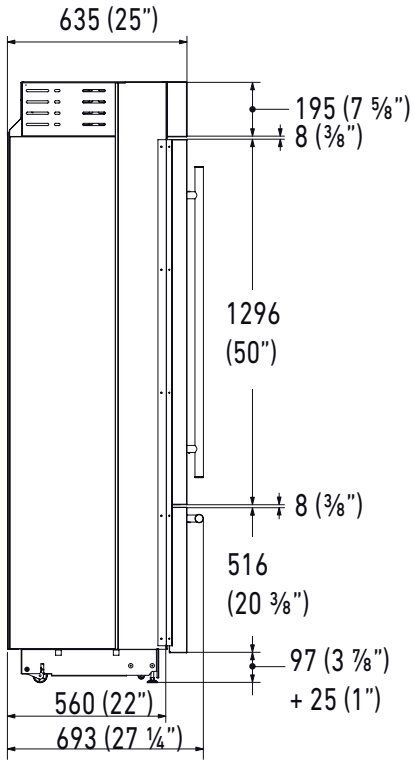

TOP VIEW, HINGE 105°

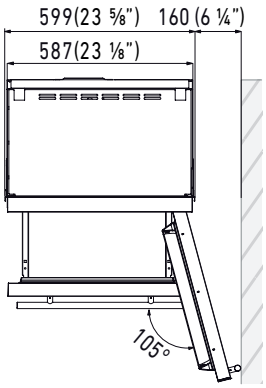

TOP VIEW, HINGE 90°

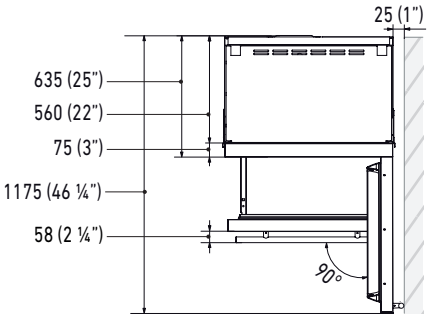

PLINTH SIZE

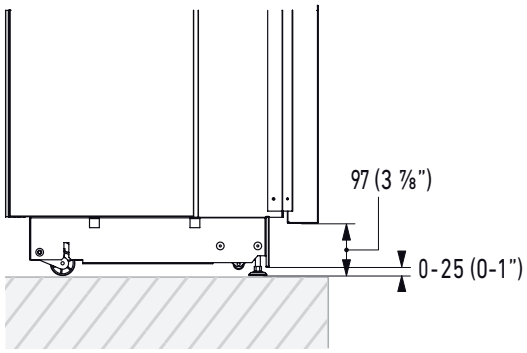

For installation specifications, please consult with Fhiaba. For optimum installation, we recommend using the actual product as the best guide.

Based on the adjustment of the feet and the height of the panel from the floor, the customer defines the perforated plinth to be installed on the equipment.

XS5990TGT6

60 cm, FRIDGE AND FREEZER, 0T Model

BUILT-IN

X-PRO® SERIE

NICHE SPECIFICATIONS AND DIMENSIONS

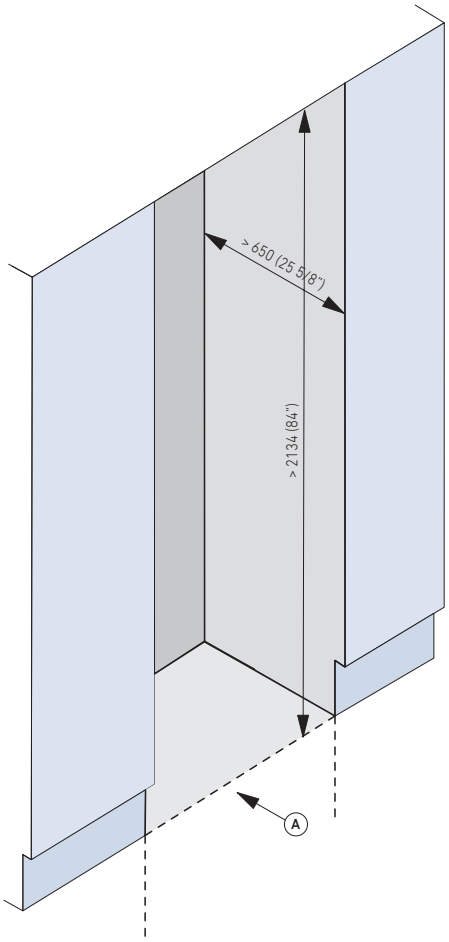

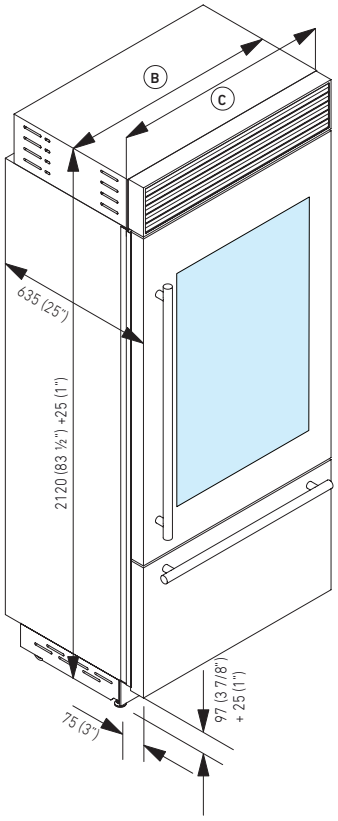

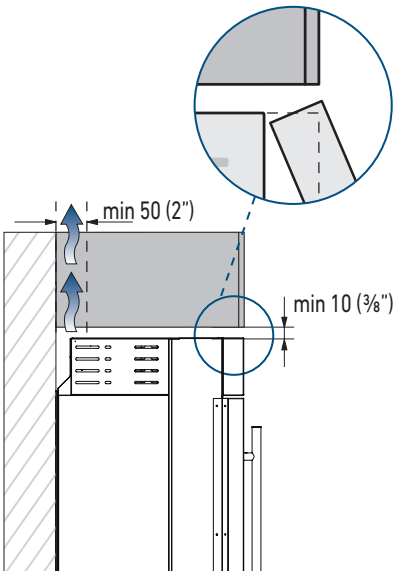

TECHNICAL DATA	
Niche Width **A** (mm)	600
Unit Width **B** (mm)	587
Unit Width with lateral frames **C** (mm)	599

Electrical and Water connection

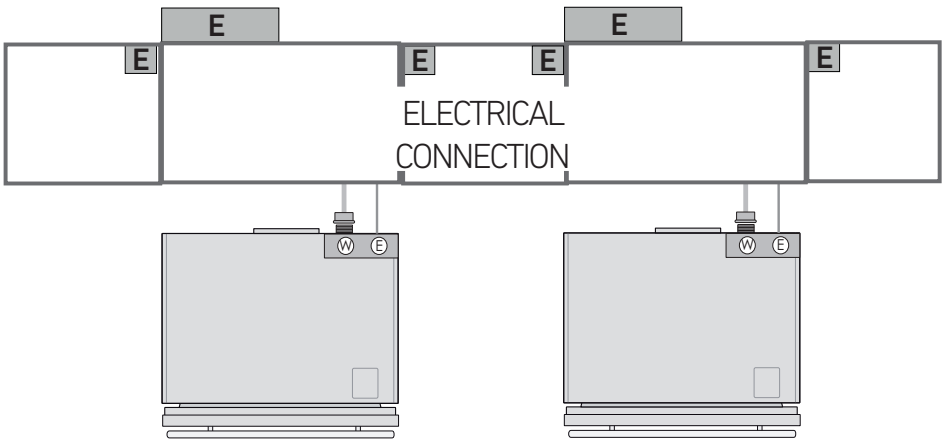

Product sheet - All specifications are subject to change without notice

XS5990TGT6

60 cm, FRIDGE AND FREEZER, 0T Model

BUILT-IN

X-PRO® SERIE

INSTALLATION INFORMATION

Niche dimensions for combined installation

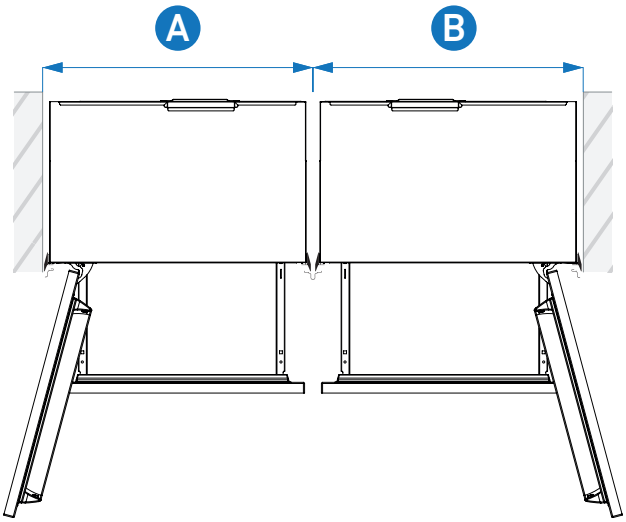

		A			
	unit size	**45**	**60**	**75**	**90**
B	**45**	90 cm	105 cm	120 cm	135 cm
	60	105 cm	120 cm	135 cm	150 cm
	75	120 cm	135 cm	150 cm	165 cm
	90	135 cm	150 cm	165 cm	180 cm

ACCESSORIES

- Stainless steel sides panels
- Glass door
- Joining kit
- X-Pro top grille kit
- Extra lenght anti-tipping kit
- Anticondensation kit
- Cleaning kit
- FLD - Fhiaba Link Device
- Painting
- 90° Door stop

For installation specifications, please consult with Fhiaba. For optimum installation, we recommend using the actual product as the best guide.

www.fhiaba.com